LIGHT

Question 2 2008 NOV/DEC GCE

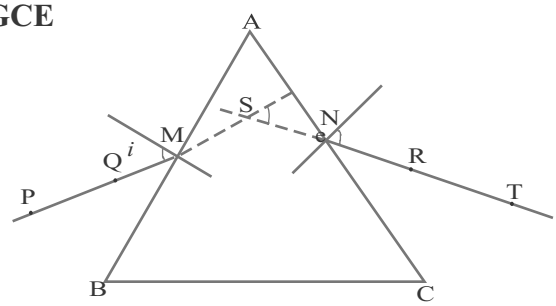

The outline **ABC** of an equilateral triangular glass prism is traced on a drawing paper. Two pins **P** and **Q** are used to trace a ray such that it makes an angle of incidence *i* at **M** on face **AB** of the outline. Two other pins, **R** and **T**, are used to trace the path of the emergent ray through **N** on face **AC** of the prism.

The incident ray and the emergent ray are produced to meet at a point **S** inside the outline. The angles of incidence *i*, emergence, e and deviation **D** are measured and recorded.

The procedure is repeated for four other values of *i*.

Fig.2(I-V) shows the outlines for the five trials.

(i) Trace the path of the ray through the prism in each case.

(ii) Measure and record for each case, the angle of incidence ***i*** and the corresponding angle of emergence, ***e***.

(iii) Also measure and record the corresponding angle of deviation D.

(iv) In each case, evaluate d = (D - e)

(v) Tabulate your readings.

(vi) Plot a graph of *d* on the vertical axis against i on the horizontal axis.
Draw a straight line through the points.

(vii) Determine the slope, *s*, of the graph and the intercepts I_1, and I_2 on the vertical and horizontal respectively.

(viii) Evaluate $I = \frac{I_1 + I_2}{2}$

(ix) State two precautions that are necessary when performing this experiment in the laboratory.

b(i) A ray of light experiences a minimum deviation when passing symmetrically through an equilateral triangular glass prism places in air.
Calculate the angle of incidence of the ray.
(Refractive index of glass = 1.5)

(ii) With the aid of a ray diagram, show how a triangular glass prism can be used to change the direction of light through an angle of 180°.

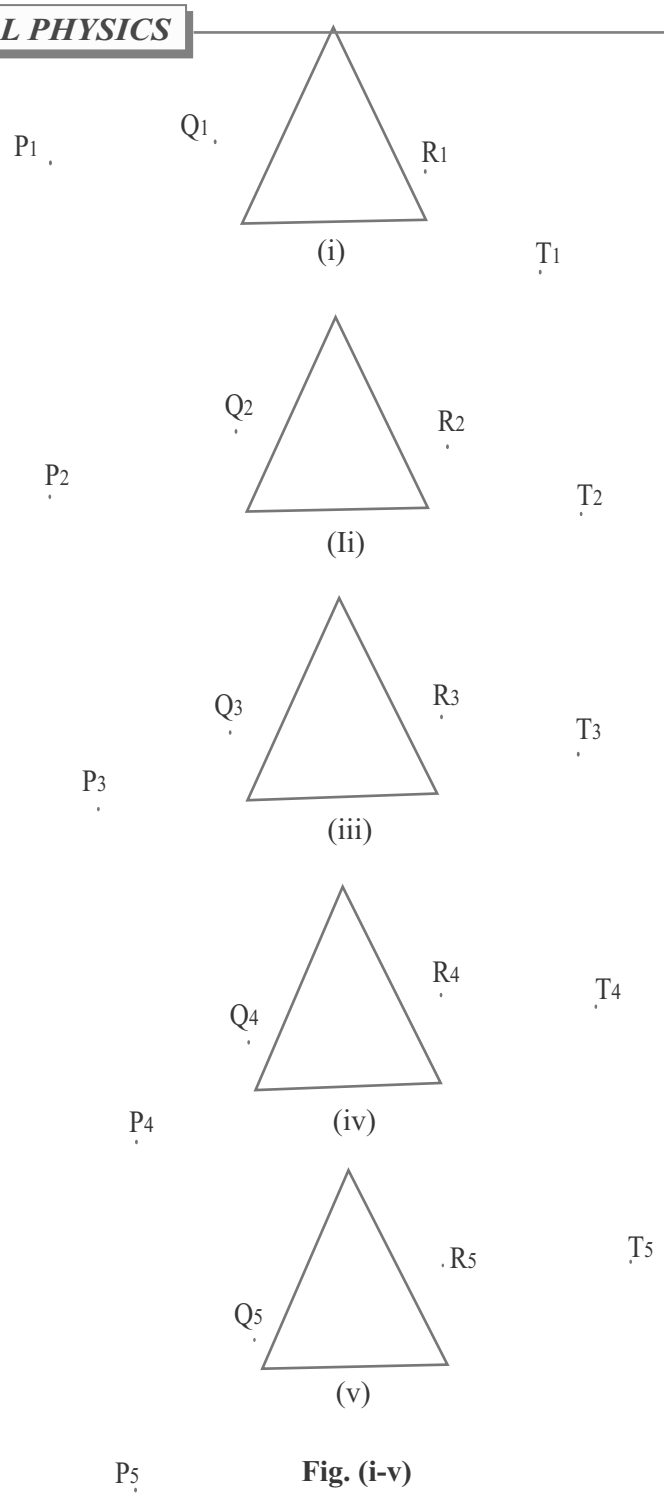

Fig. (i-v)

Solution

	1	2	3	4
i	i^o	e^o	D^o	$d = (D-e)^o$
1	*36*	*66*	*41*	*-25*
2	*46*	*53*	*38*	*-15*
3	*56*	*42*	*37*	*-5*
4	*66*	*35*	*40*	*+5*
5	*76*	*30*	*44*	*+15*

Explanation of table

1. Column 1 is obtained by placing the protractor as shown in diagram ***a***
2. Column 2 is obtained by placing the protractor as shown in diagram ***b*** and measuring e as shown in diagram b.
3. Column 3 is obtained by placing the protractor as shown in diagram c and measure the angle **D**.
4. Column 4 is obtained by evaluating readings in column 3- column 2.

$$\text{Slope (S)} = \frac{y_2 - y_1}{x_2 - x_1} = \frac{15 - -25}{76 - 36} = \frac{40}{40} = 1$$

(vii) Intercept I_1 on horizontal axis = -61°
Intercept I_2 on vertical axis = 60°

$$= \frac{I_1 + I_2}{2} = \frac{61 - 60}{2} = \frac{1}{2} = 0.5$$

Precautions

1. I will ensure pins are reasonably spaced
2. I will ensure pins are upright
3. I will ensure neat traces by using a sharp pencil
4. I will avoid parallax error when reading the protractor

B(i) Angle of Prism A = 60°

At minimum deviation r = A/2 = $60^o/2$ = 30°

(ii) $n = \frac{\text{Sin i}}{\text{Sin r}}$

$1.5 = \frac{\text{Sine i}}{\text{Sine 30}} = \frac{\text{Sine i}}{0.5}$

1.5 x 0.5 = Sine i

0.75 = sine i

i = 48.59^o

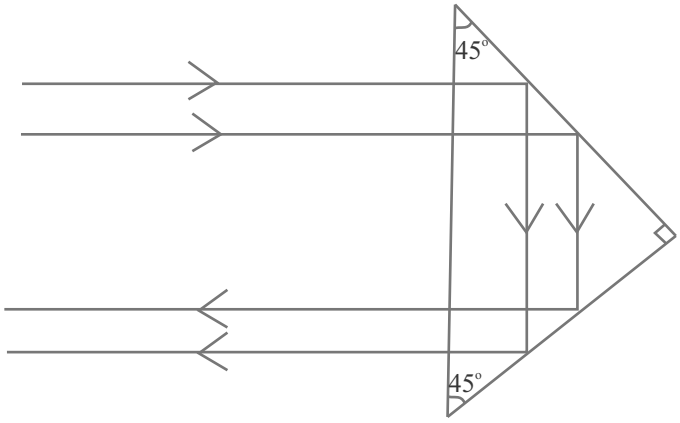

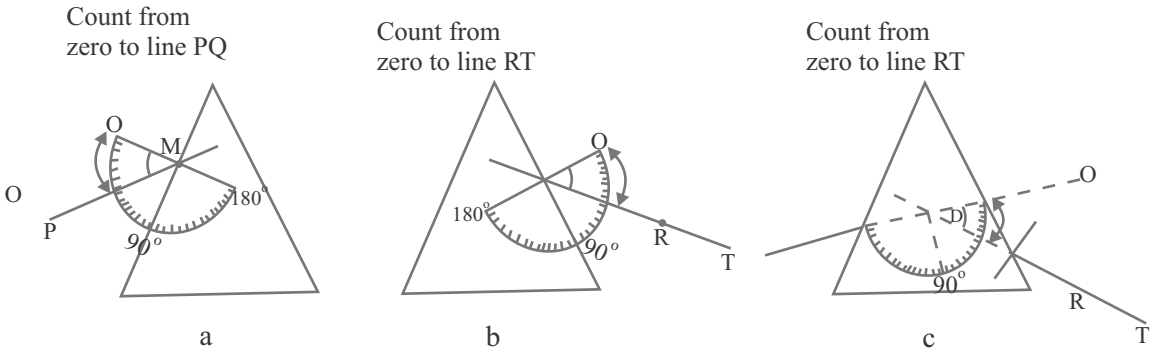

Title: Graph of d against i

Scale: 2cm represents 10º on both axes

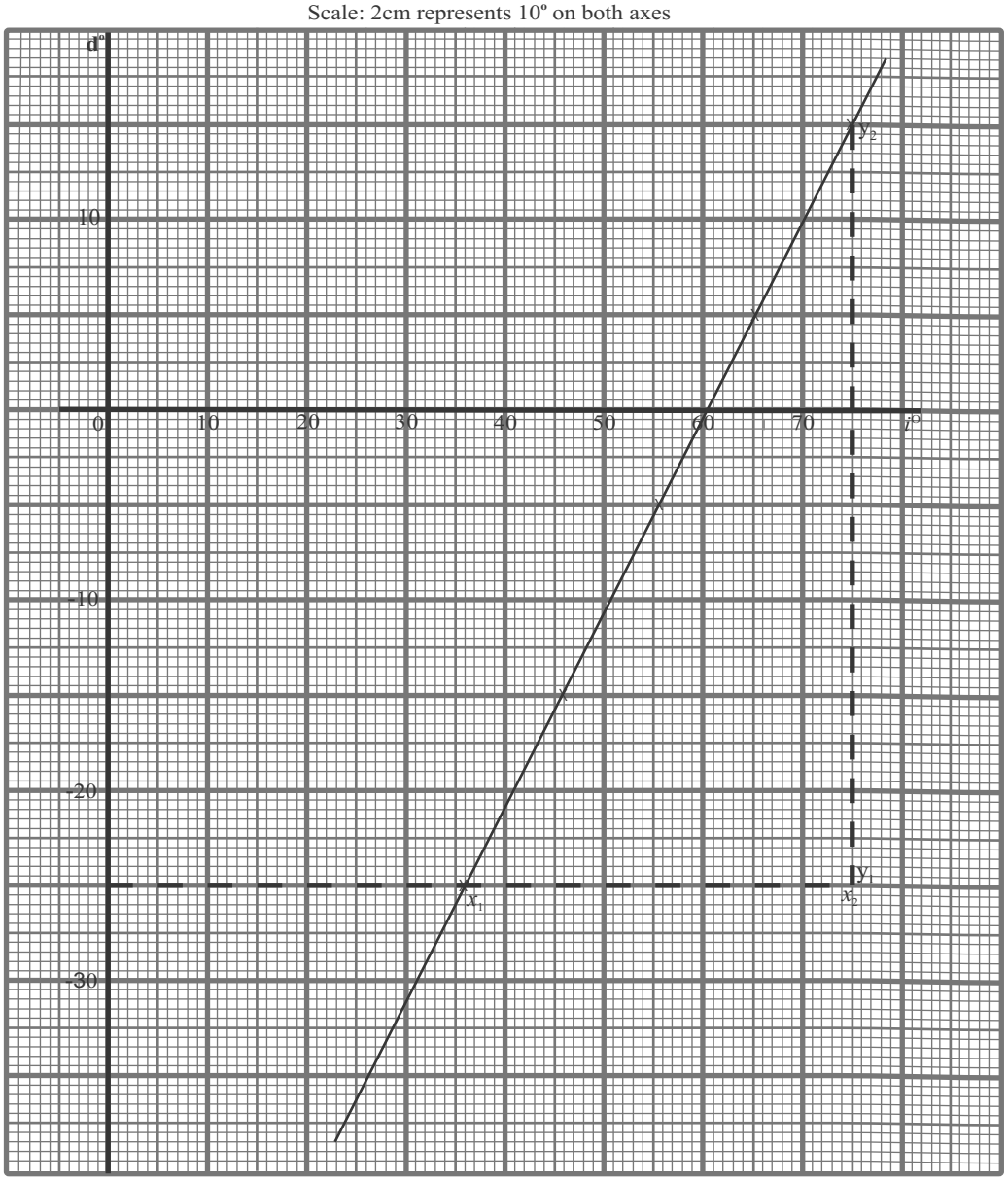

Question 2 2001 NOV/DEC GCE

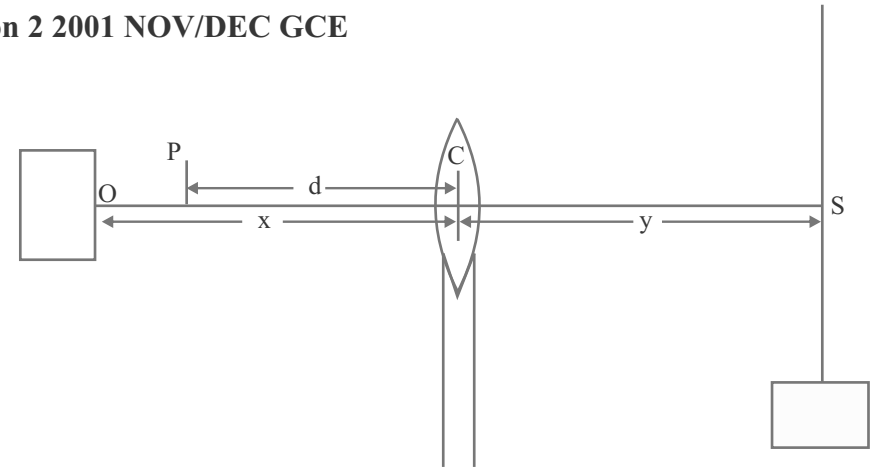

A plane mirror is placed behind and in contact with a converging lens. An illuminated object, O, is used to locate the position, P, where the object coincides with its image formed by the lens mirror combination.

The distance, d, between the lens, C and the illuminated object is measured and recorded. The plane mirror is removed and the illuminated object placed at a distance x from the lens, greater than d as shown in the diagram above. The image of the illuminated object is located on a screen S. The distance, y, of the image from the lens is measured and recorded.

Fig. 2(a) represents the distance OC = x_i of the object O to the positions of the centre C of the converging lens.

Fig 2(b) represents the corresponding distances CS = y_i of the positions of the screen S to the centre of the converging lens.

Fig. (a)

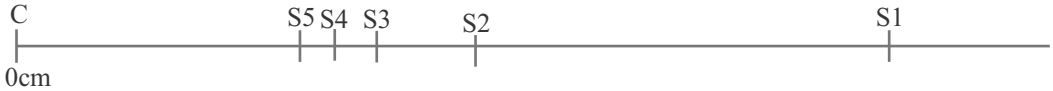

Fig. (b)

Fig. 2

Scale: 1cm represents 5cm

Solution

i	X(cm)	Xconv(cm)	Y(cm)	Yconv(cm)	X,Y (cm^2)	(X+Y)(cm)
1	4.0	20.0	12.4	62.0	1240.0	82.0
2	6.0	30.0	6.5	32.5	975.0	62.5
3	8.0	40.0	5.1	25.5	1020.0	65.5
4	10.0	50.0	4.5	22.5	1125.0	72.5
5	12.0	60.0	4.0	20.0	1200.0	80.0
	1	2	3	4	5	6

Explanation of table

Column 1 and 3 are obtained by measuring and recording distances on metre rule to 1 decimal place as in diagrams Fig. 2a & 2b respectively.

Column 2 and 4 are obtained by multiplying readings in columns 1 and 3 by the scale factor

$$\text{Slope (m)} = \frac{y_2 - y_1}{x_2 - x_1} = \frac{1240 - 1200}{82 - 80} = \frac{40}{2} = 20$$

$$K = \frac{m}{d} = \frac{20}{4} = 5$$

Precautions

(i) Avoid parallax error in reading metre rule

(ii) Ensure that a sharp image is formed on the screen before taking readings

(iii) Ensure optical instruments such as the lens, screen and Raybox are on the same horizontal level.

(iv) Ensure lens is vertical

b(i)

Real	Virtual
1. Image is formed on screen	Image is not formed on screen
2. Formed by the actual intersection of rays	Formed by intersection of imaginary rays.

(Ii) Converging lenses are used in:

(i) Compound microscope (ii) Astronomical Telescope

(iii) Simple microscope (iv) Camera

(V) Eye

Scale: 2cm represents 500cm^{2}on y-axis
2cm represents 5cm on *x*-axis

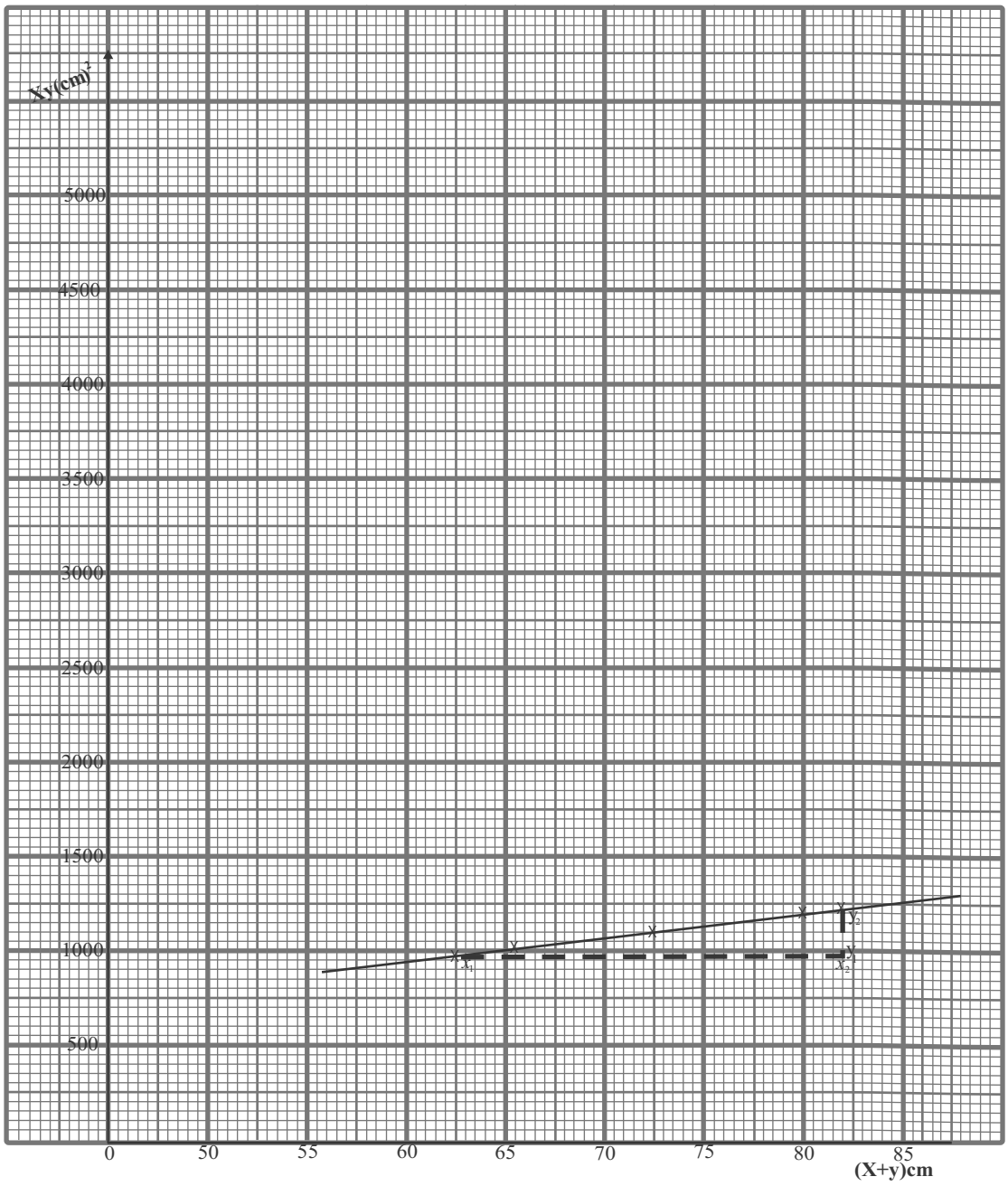

Question 2 2006 NOV/DEC GCE

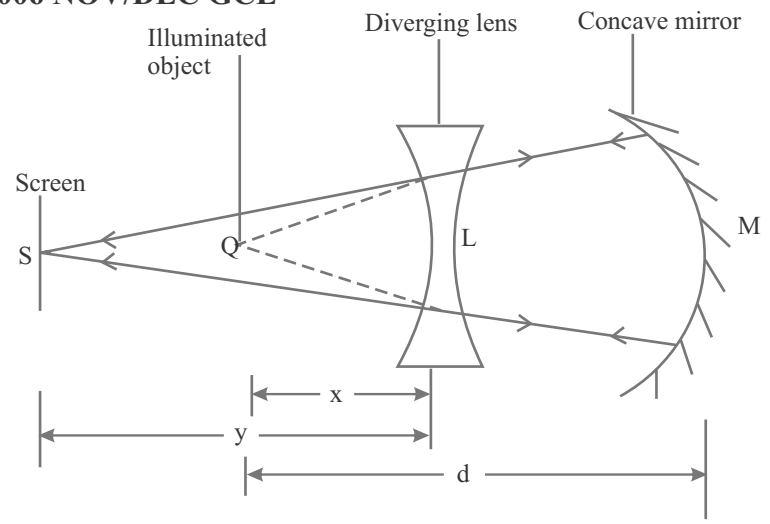

An illuminated object O is placed in front of the reflecting surface of a concave mirror M. The position of the object is adjusted until its sharp image coincides with it. This position is noted and recorded as Q. The distance, d, between Q and the mirror is measured and recorded.

A diverging lens L is then placed between Q and M at a distance x from Q as shown in the diagram above.
The position of a screen S, placed behind Q is adjusted until a sharp image is formed on the screen. The distance y between the screen and the diverging lens, L, is measured and recorded. The procedure is repeated for four other values of x.

Figure 2(a) shows the position of the diverging lens Li relative to Q.
Figure 2(b) shows the corresponding positions of the screen Si relative to the position of the diverging lens L and the distance d of Q relative to the mirror, where i = 1, 2, 3, 4 and 5 respectively.

(i) Measure and record xi = Qli
(ii) Evaluate x-1 in each case.
(iii) Evaluate and record the corresponding values of yi = Lsi.
(iv) Evaluate y-1 in each case.
(v) Measure and record d = MQ.
(vi) Tabulate your readings
(vii) Plot a graph of x-1 on the vertical axis against y-1 on the horizontal axis.
(viii) Determine the slope, s, of the graph and the intercept, I, on the vertical axis.

(ix) State two precautions you would take to ensure accurate results if you were performing this experiment in the laboratory.

Fig. 2(a)

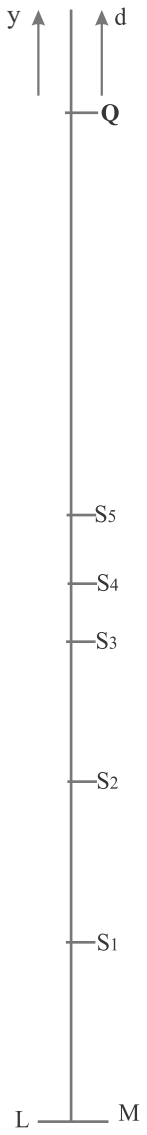

Fig. 2(b)

Scale: 1cm represents 2cm

b(i) What physical quantity, in relation to the concave mirror in the experiment above, is represented by the distance d?

(ii) A converging lens of focal length 12cm produces a real image 60cmaway from the lens. Calculate the magnification of the image.

Solution

	1	2	3	4	5	6
i	*xi(cm)*	*yi(cm)*	*xconv(cm)*	*yconv(cm)*	x^{-1} cm^{-1}	y^{-1} cm^{-1}
1	2.1	2.8	4.2	5.6	0.238	0.1786
2	5.2	5.4	10.4	10.8	0.096	0.0930
3	7.5	7.6	15.0	15.2	0.067	0.0658
4	10.5	8.5	21.0	17.0	0.048	0.0588
5	12.4	9.6	25.4	19.2	0.039	0.0520

Explanation of table

Columns 1 and 2 are obtained by measuring the lengths on fig 2(a) and 2(b) using a ruler and recording to one decimal place.

Columns 3 and 4 are obtained by multiplying the readings in columns 1 and 2 by the scale factor given in fig 2.

Columns 5 and 6 are obtained by finding the reciprocals of columns 3 and 4 respectively using a calculator.

d = MQ = 15.8cm

dconv = 31.6cm

$$\text{Slope (S)} = \frac{y_2 - y_1}{x_2 - x_1} = \frac{0.175 - 0.05}{0.14 - 0.06} = \frac{0.125}{0.08} = 1.56$$

Intercept on Y-axis is I = $-0.045cm^{-1}$

Precautions

(i) Ensure optical instruments such as the Lens, Raybox and screen are all on the same horizontal level.

(ii) Avoid parallax error when reading the metre rule.

b(i) The distance d represents the radius of curvature.

(ii) m + 1 = v/f
m = v/f - 1
= 60/12 - 1
= 4

Title: The Graph of x^{-1} against y^{-1}

Scale: 4cm represents 0.05 N on y-axis

2cm represents 0.02 N on x-axis

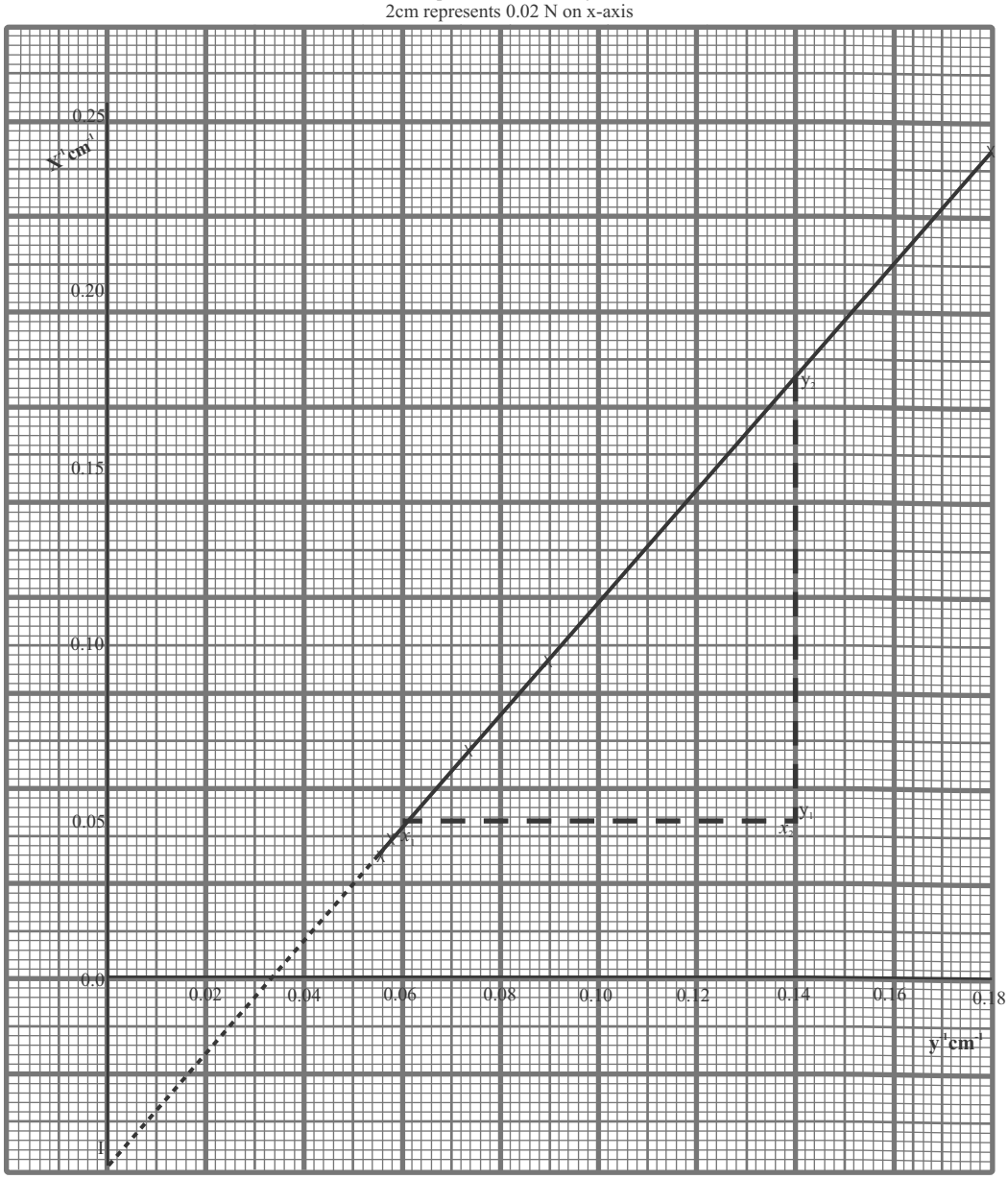

Question 2 2004 NOV/DEC GCE

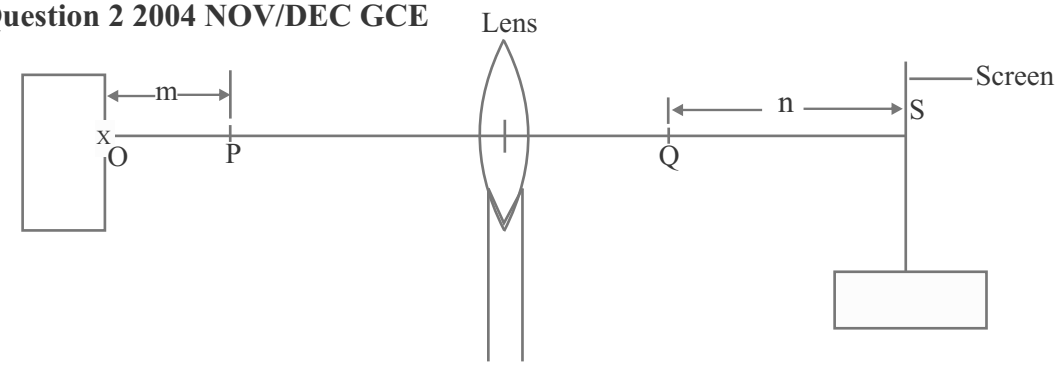

The principal foci, P and Q, of a converging lens were determined. The image of an illuminated object O, placed at a distance, m, from P is obtained on a screen S placed at a distance n from Q as shown in the diagram above. The procedure is repeated for various values of m, and the corresponding values of n were measured and recorded.

In figure 2(a), POi represents the distance mi, between P and the positions of the illuminated object Oi.

In figure 2(b), QOi represents the corresponding distance n, between Q and the screen S, where i = 1, 2, 3, 4, 5 and 6.

(I) Measure and record the values of m = POi and the corresponding values of n = QSi

(ii) Evaluate n^{-1} in each case.

(iii) Tabulate your readings.

(iv) Plot a graph of n^{-1} on the vertical axis against m on the horizontal axis.

(v) Determine the slope, s, of the graph.

(vi) Evaluate $k = \frac{1}{\sqrt{s}}$

(vii) State two precaution you would take to obtain accurate results if you wee performing this experiment in the laboratory.

Scale: 1cm represents 5cm
Fig. 2(a)

Scale: 1cm represents 5cm
Fig. 2(b)

b(i) State two applications of a converging lens.

(ii) An object is placed 10cm from a converging lens. When a plane mirror is placed vertically behind the lens, the image formed coincides with the object. Calculate the focal length of the lens.

Solution

	1	2	3	4	5
i	*mi(cm)*	*ni(cm)*	*mconv(cm)*	*nconv(cm)*	$n^{-1}cm^{-1}$
1	*4.0*	*11.0*	*20.0*	*55.0*	*0.0182*
2	*6.0*	*7.4*	*30.0*	*37.0*	*0.0270*
3	*8.0*	*5.4*	*40.0*	*27.0*	*0.0370*
4	*10.0*	*4.4*	*50.0*	*22.0*	*0.0460*
5	*12.0*	*3.4*	*60.0*	*20.0*	*0.0588*
6	*14.0*	*3.0*	*70.0*	*15.0*	*0.0667*

$$\text{Slope (S)} = \frac{y_2 - y_1}{x_2 - x_1} = \frac{0.066 - 0.020}{70 - 2_2} = \frac{0.045}{50} = 9.4 \times 10^{-4} cm^{-2}$$

$$K = \frac{1}{\sqrt{S}} = \frac{1}{\sqrt{9.5 \times 10^{-4}}} = 32.47$$

Precautions

(i) Ensure that the optical instruments such as the Lens, screen and raybox are optically aligned.

(ii) Ensure that a sharp image is formed on the screen before taking the readings.

(iii) Avoid parallax error when talking readings on the metre rule.

b(i) (i) Projection lantern
(ii) Eye
(iii) Camera
(iv) Compound microscope
(v) Simple microscope
(vi) Astronomical Telescope

(ii) The focal length of converging lens = object distance = 10cm.

Title: Graph of n^{-1} against m

Scale: 2cm represents 0.01 cm^{-1} on y-axis

2cm represents 10 cm on x-axis

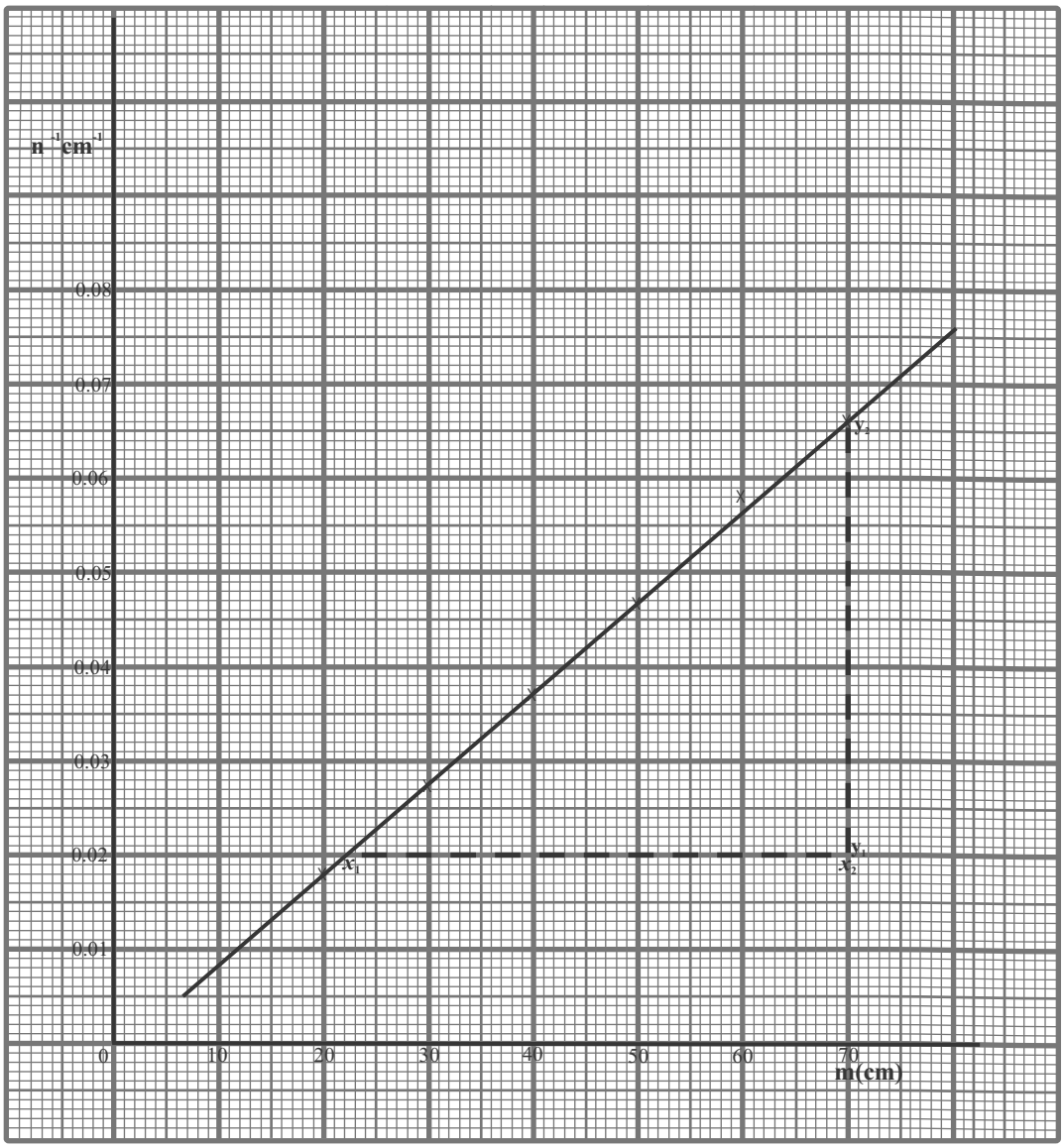

Question 2 2002 NOV/DEC GCE

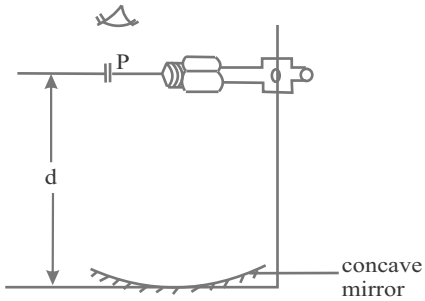

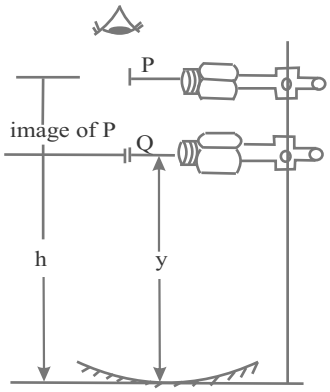

A concave mirror is placed on the base of a retort stand and a pin, P, is held horizontal above the mirror as shown in the diagram above. The position of P is varied until its image in the mirror, when viewed vertically downwards, coincides with it. The distance, d, between the image and the base of the retort stand is measured and recorded.

The position of P is adjusted so that it is at a height, h,(>15cm) from the base of the retort stand. A second pin, Q, is used to locate the position of the image of P, using the method of no parallax. The distance, y, between the position of Q and the base of the retort stand is measured and recorded.

This procedure is repeated for four other positions of P.

Fig. 2(a) shows the position of P when its image formed by the concave mirror coincides with it.

Fig. 2(b) shows the positions of P relative to the base of the retort stand, while Fig. 2(c) shows the corresponding positions of Q above the base of the retort stand.

(I) Measure and record $PO = d$

(ii) Measure and record the values of $hi = OP$ and the corresponding values of $yi = OQ$ where i = 1, 2, 3, 4 and 5

(iii) In each case evaluate h^{-1} and y^{-1}

(iv) Tabulate your readings.

(v) Plot a graph of h^{-1} on the vertical axis against y^{-1} on the horizontal axis.

(vi) Determine the slope, s, of the graph and the intercepts, C_1 and C_2 on the vertical and horizontal axes respectively. Evaluate C_1^{-1} and C_2^{-1}

(vii) Evaluate: (i) $k_1 = \frac{1}{2}\left(\frac{C_1^{-1} + C_2^{-1}}{s}\right)$ (ii) $k^2 = \frac{d}{k_1}$

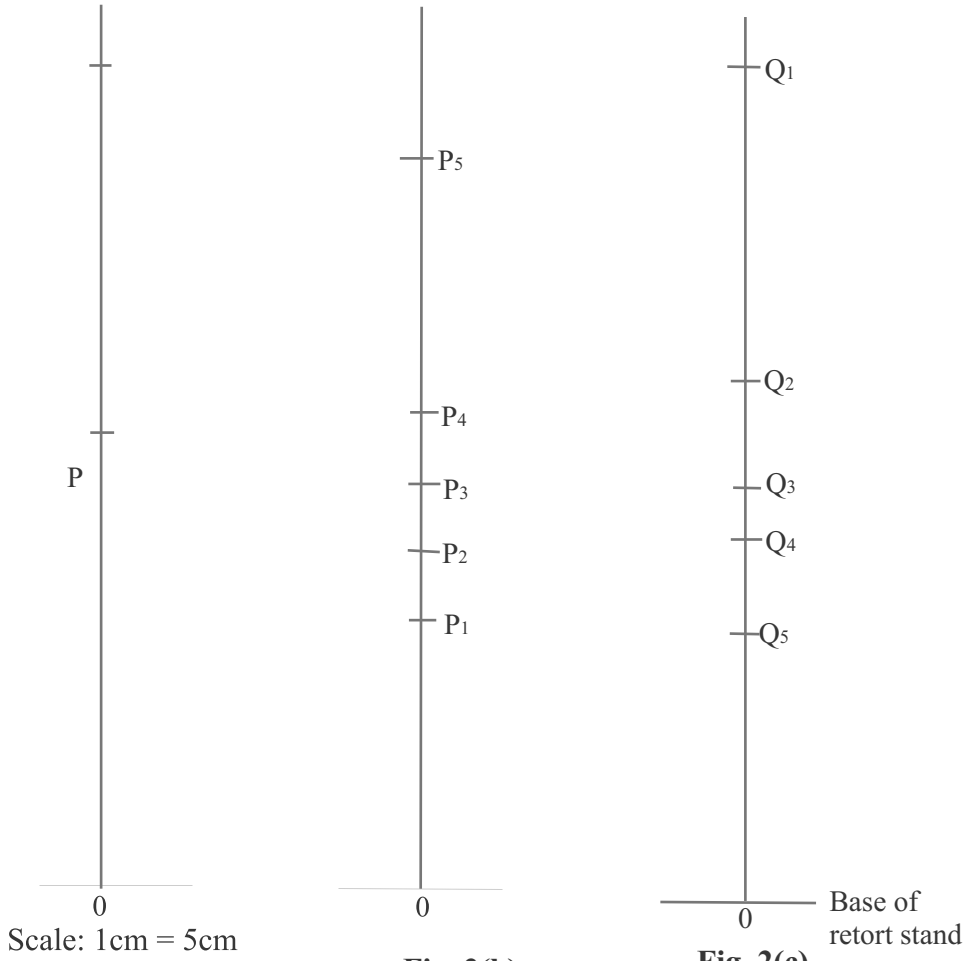

Scale: 1cm = 5cm

Fig. 2(a) **Fig. 2(b)** **Fig. 2(c)**

(viii) State two precautions you would take to obtain accurate results if you were performing this experiment in the laboratory.

b(i) Explain, with the aid of a labelled diagram, how a concave mirror can be used to produce an enlarged, upright image of an object.

(ii) A concave mirror of focal length 10cmformsan image of an image placed 20cmfromits pole. Calculate the magnification produced.

Solution Po = d = 6.0cm dconv = 30.0cm

	1	2	3	4	5	6
i	*hicm*	*yicm*	*hconv(cm)*	*yiconv(cm)*	h^{-1} cm^{-1}	y^{-1} cm^{-1}
1	*3.6*	*11.2*	*18.0*	*56.0*	*0.056*	*0.018*
2	*4.5*	*6.9*	*22.5*	*34.5*	*0.044*	*0.030*
3	*5.4*	*5.5*	*27.0*	*27.5*	*0.037*	*0.036*
4	*6.3*	*4.8*	*31.5*	*24.5*	*0.032*	*0.042*
5	*9.5*	*3.8*	*47.5*	*19.0*	*0.021*	*0.053*

Explanation of table

d = 6.0cmis obtained by measuring the length OP in fig. 2a
dconv is obtained by multiplying d = 6.0 by the given scale factor
Column 1 and 3 are obtained by measuring Opi and Qqi in fig.2b and 2c respectively using a ruler and recording to one decimal place.
Column 2 and 4 are obtained by multiplying the data in column 1 and column 3 by the given scale factor and recording to one decimal place.
Column 5 and 6 are obtained by evaluating with a calculator the reciprocal converted values in column 3 and column 4 respectively.

$$\text{Slope (S)} = \frac{y_2 - y_1}{x_2 - x_1} = \frac{0.053 - 0.01}{0.064 - 0.02} = \frac{0.043}{0\ 044} = 0.977$$

(vi) Intercept C_1 on vertical axis = 0.074 cm^{-1}

Intercept C_2 on horizontal axis = 0.075cm^{-1}

$$C_1^{-1} = \frac{1}{0.074} = 13.5$$

$$C_2^{-1} = \frac{1}{0.074} = 13.5$$

$$K_1 = \tfrac{1}{2}\left(\frac{C_1^{-1} + C_2^{-1}}{s}\right) = \tfrac{1}{2}\left(\frac{13.5 + 13.5}{0.977}\right) = 13.78\text{cm}$$

$$K_2 = \frac{d}{K_1} = \frac{30}{13.78} = 2.18$$

Precautions

(i) Ensure that pins are horizontal

(ii) Ensure a firm support

(iii) Avoid parallax error when reading the metre rule.

B(i)

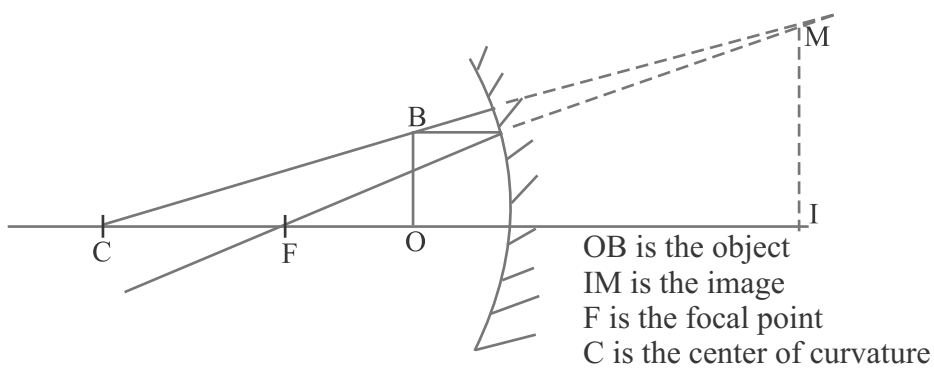

$$\frac{1}{m} + 1 = \frac{u}{F}$$

$$\frac{1}{m} = \frac{u}{F - 1} = \frac{20}{10} - 1 = 2 - 1 = 1$$

Graph of h^{-1} against y^{-1}

Scale: 2cm represents 0.01 cm^{-1} on both axes